ECE 445 Individual Progress Report

By

Timothy Fong

March 2026

Contents

1. Introduction 1
2. Individual Design Work 1
2.1 Introduction 1
2.2 Design 1
2.2.1 Design procedure 1
2.2.2 Design details 2
2.3 Verification 5
3. Conclusion 5
References 6

1. Introduction

The project I am a part of is Team 11 of the Battlebot competition led by Professor Gruev. We're tasked with designing a robot that can engage in controlled combat with 7 other teams. There are specific rules from NRC that we must follow about the battlebot ruleset under the 2lb weight class which introduces design challenges for my team. I am tasked with designing the PCB that houses all the electronics which encompasses the subsystems of the microcontroller and the power subsystems. These interacts with the control subsystem that involves the motors being used within the custom design mechanical shell. It has been a bit of work on my end as my team has placed all responsibility of the PCB and electronic design on me mainly.

2. Individual Design Work

2.1 Introduction

This section I will describe what I've individually worked on during the semester so far for my team with regards to the PCB and schematic. As well as how I incorporated feedback from the design review hosted with Professor Gruev and other peers a few weeks ago.

2.2 Design

2.2.1 Design procedure

My team was debating for a bit on what sort of weapon subsystem should be used as we received feedback that the project scope wasn't challenging enough for the class. A drill weapon system was decided on which required an extra motor to be used to make the drill weapon. Originally, we thought about using a robot that could be a 4-motor drive plus an additional motor to have better traction. Unfortunately, this original design would exceed the 2-pound weight limit and so a three-motor system would be at work. I had to choose many of the electrical components involved in the PCB and so I opted for a ESP32 wroom s3 module which had a bulit in antenna for wifi. The schematic portion of the project was a significant time sink to make sure everything was connected properly. The layout and routing also solely fell on me, which was also a time sink in terms of ensuring everything was connected properly.

2.2.2 Design details

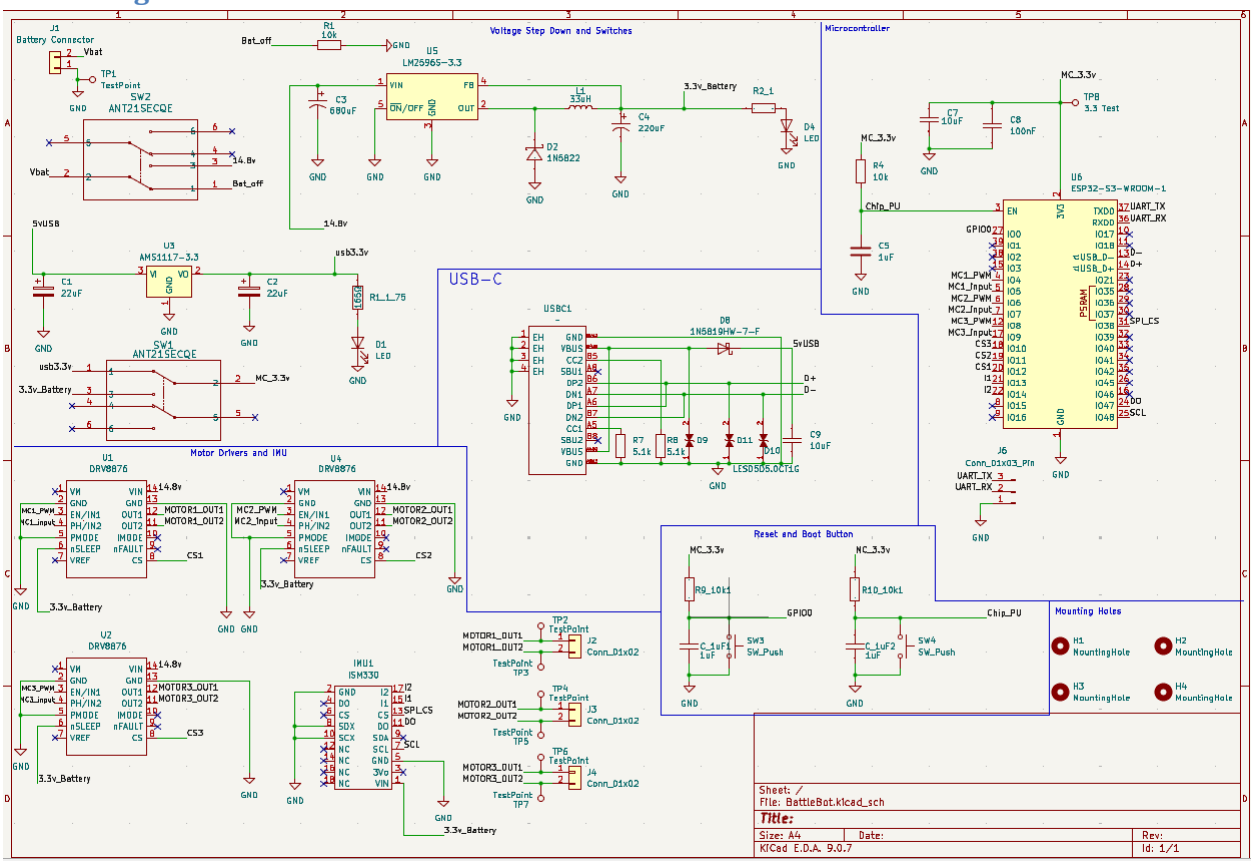

Figure 3: Overall Schematic of PCB Design shown above

In terms of the PCB design itself, from the schematic to the layout/routing of the PCB was done solely by me. Starting with the schematic the main design work was the programming circuitry as well as the power subsystem. As shown in figure 1, we can see that I added a buck converter to step down from 5V to 3.3V for the USB as well as a 14.8V to 3.3V from the battery.

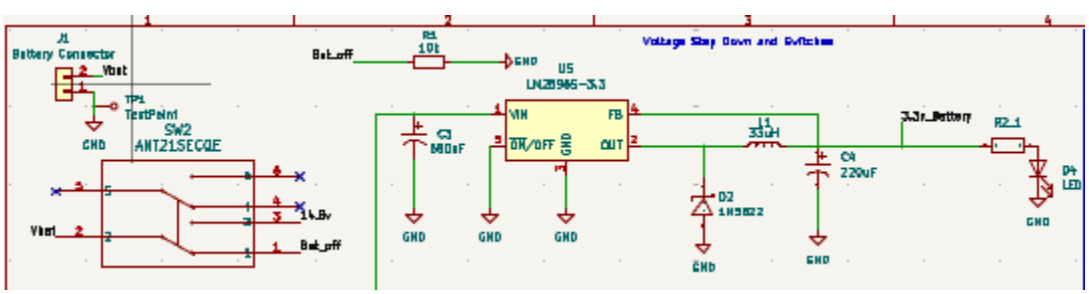

Figure 2: Battery Stepdown circuitry

Originally, I wanted to opt for voltage regulators, but Professor Gruev suggested buck converters due to how regulators would end up increasing the temperature on the board compared to buck converters. As a result, I added the LM2596S 3.3V version for battery power. The diode on the output port is used to prevent feedback current from damaging the buck converter IC and the additional capacitors are used to

ensure a stable voltage is sent through the lines. I added a status LED on the power circuits to have some indication that something is working. The resistor is used to voltage limit and is based on what type of LED I found that was rated at some current.

The most time-consuming portion of the PCB was the programming circuit with the microcontroller. I opted to use a USB-C connector to directly connect to the D+ and D- pins that would be ESP32 S3 WROOM module. The circuit as shown below has diodes to ensure that incoming current wouldn't destroy the microcontroller or computer that is attached to the connector. According to the ESP32 tutorial that was shown on the course wiki, the traces had to have an impedance of 90 ohms just about for USB 2.0 to transmit data properly.

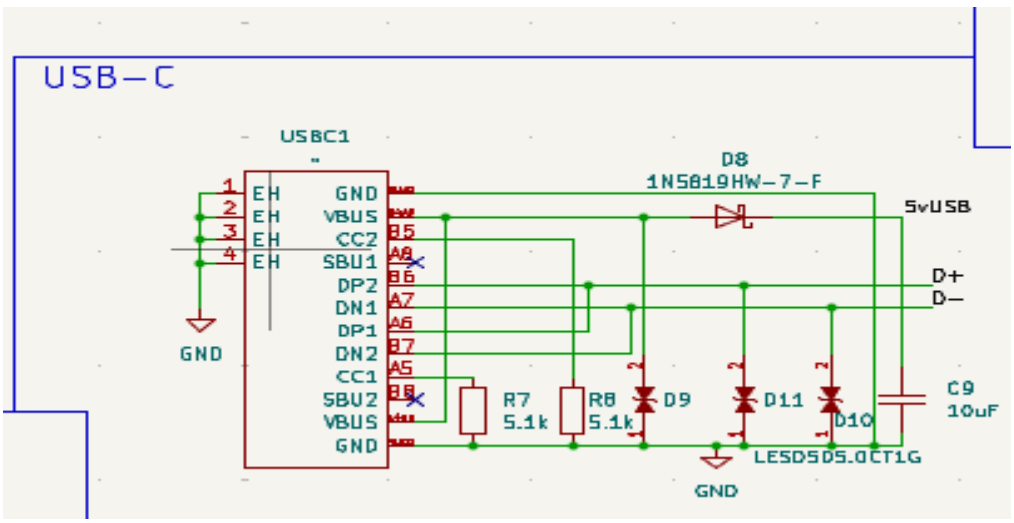

Figure 3: USB-C Connector Circuitry

The calculations were based on the JLCPCB manufacturing requirements shown on their website with its own impedance calculator and using a free to use program called PCB ToolKit to calculate the width and gap needed for 90 ohms at least.

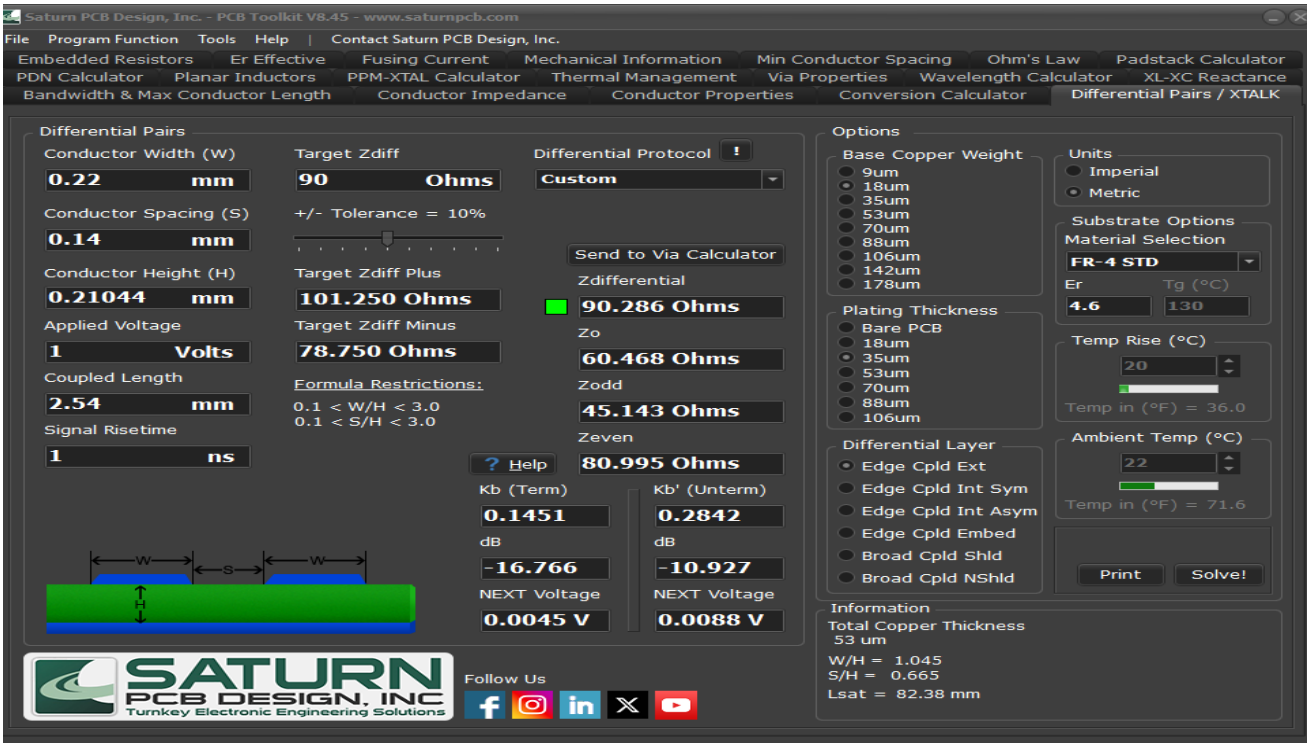

The conductor height was given from JLCPCB manufacturing requirements, and this was set in KiCad under the design rules and net classes.

Another concern with using a USB-C connector to directly connect to the ESP32 module for programming was that USB required the VBUS line to be able to terminate voltage wise. Since this is necessary to program the microcontroller for any firmware changes, we wanted I decided to use a switch that would be able to go between the battery or the USB power to the microcontroller. This was done because I was concerned that back current could flow into the voltage step down circuitry that could damage components.

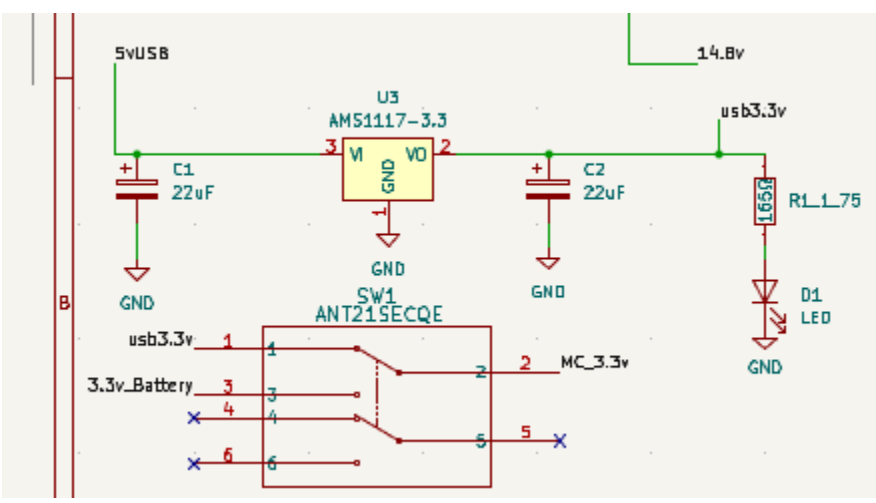

2.3 Verification

Verification will include utilizing the test points I included on the PCB to check the motor currents to ensure they're outputting the expected currents using an oscilloscope or my own multimeter. For the voltage step downs the same procedure can be done to measure 3.3V on the test point that is being placed on the microcontroller. As of right now, I have not gotten the PCB back from JLCPCB so once the PCB has been delivered and some small soldering jobs are done then I can verify these sections. Of course, I'll also have to make sure the microcontroller flashes as well as by plugging in a USBC into the connector. Once the microcontroller can be flashed on the board is when I can verify the motors as well as other voltages to ensure all circuitry performs well. If in the event circuitry does fail, then I can use some bread boards to make a temporary set up for my team to use while I order another board.

My verification is incredibly vital in ensuring that this project will work out well because without the electronic hardware my other teammates cannot perform their tasks.

3. Conclusion

In conclusion, this class has further my understanding of PCB design and it has been a bit fun to come up with ideas for our project. The group has been a bit behind I must admit in terms of working together on the project. There have been some commitment issues that we've worked through and scheduling being tricky due to course load. I think we're still on the right track in terms of getting everything assembled and we have a good idea on the mechanical structure of the robot. I do feel as if I was put through a good amount of the work by myself as I had to do the entire PCB design by myself without much assistance. It would've been much faster if that whole process was more collaborative. In the future from this week, I can see that once I verify, we can flash to the microcontroller as well as have all the power circuitry working well the software development can go into full gear. I hope to see our robot be able to compete in the competition near the end of the semester and hopefully defeat a team at least. If all the hardware works well, then I can also shift into helping Ved work on some of the software if he needs some more help. The most ambitious goal would be to win the whole competition, but realistically being able to compete is good enough in my eyes with how little time we've had.

References

[1] *Engineering IT Shared Services, ":: ECE 445 - Senior Design Laboratory," Illinois.edu, 2026. https://courses.grainger.illinois.edu/ece445/wiki/#/CAD-tutorial/cad-tutorial (accessed Apr. 03, 2026)*

[2] "DRV887x." Available: https://www.ti.com/lit/ds/symlink/drv8876.pdf

[3] "JLCPCB," *jlcpcb.com*. https://jlcpcb.com/capabilities/Capabilities

[4] Marion, "April 16-18, 2026." Accessed: Apr. 03, 2026. [Online]. Available: https://irp.cdn-website.com/9297868f/files/uploaded/NRCContestRules2026-b6b64519.pdf